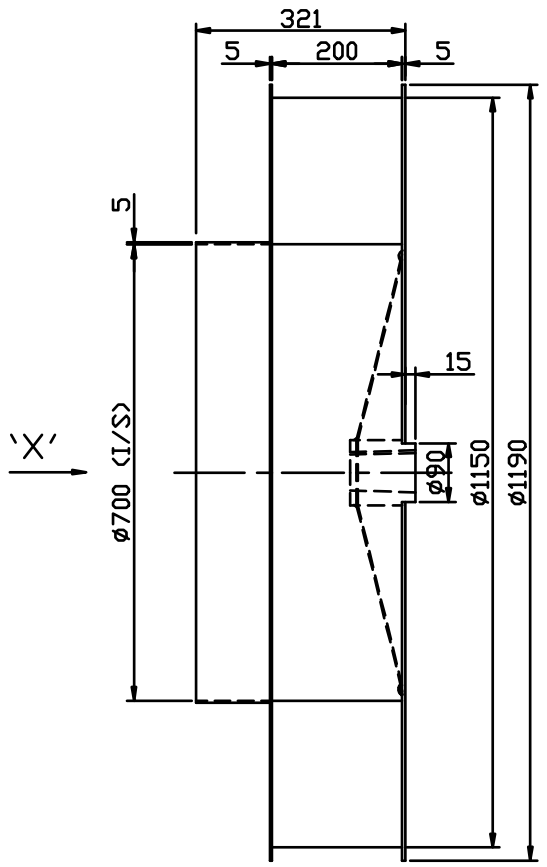

ELEVATION

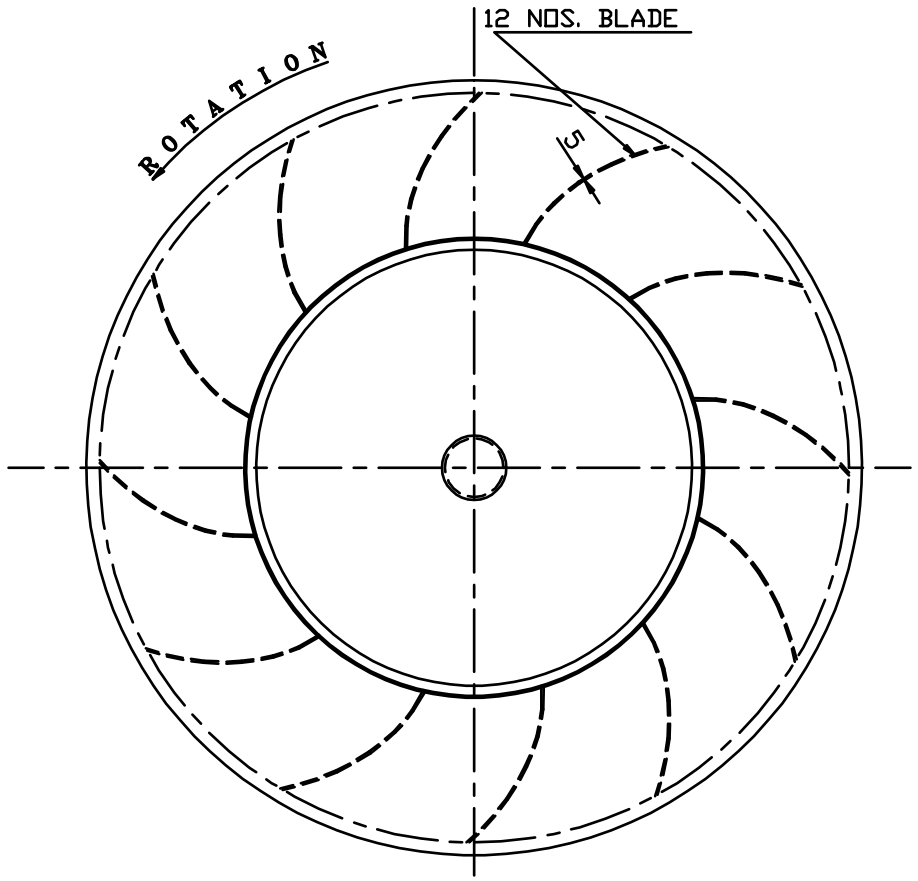

VIEW FROM- 'X'

IMPELLER ROTATION CLOCKWISE FROM DRIVING SIDE

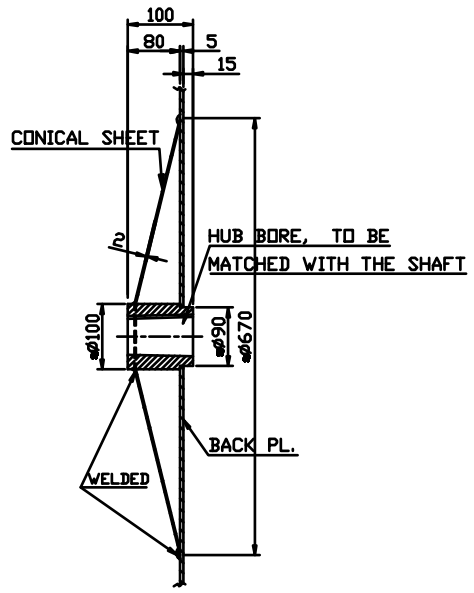

HUB

IMPELLER
MATL. :- AISI-304
PART/ ITEM NO. -2 AS PER
R.S.P. DRG. NO. :- PD/R-145619

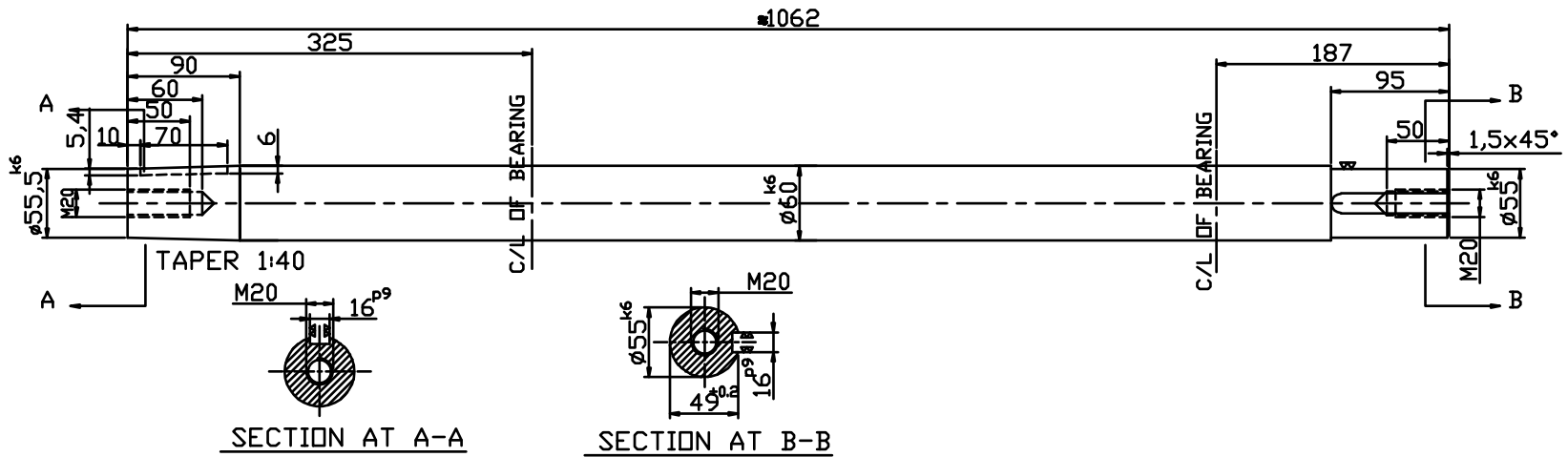

SECTION AT A-A

SECTION AT B-B

SHAFT
MATL. :- 45 C8 IS:1570-84
PART/ ITEM NO. -4 AS PER
R.S.P. DRG. NO. :- PD/R-145619

No.	DESCRIPTION	DIMENSION / TYPE	MATERIAL
4	SHAFT		45 C8 IS:1570-84
2	IMPELLER		AISI 304

QUANTITY/FAN

ALL DIMENSION ARE IN mm UNLESS OTHER WISE SPECIFIED

CUSTOMER'S SCOPE

AIR TECHNIKO'S SCOPE

DATE	JOB No.	SCALE	PROJECTION
10/07/15	1511	N.T.S.	
DRAWN BHASKAR	CHECKED GD.	APPROVED A.ROY.	

ASSEMBLY DRG. No.

IMPELLER & SHAFT FOR STEAM EXHAUST FAN OF SLAB CASTING SHOP.

AIR TECHNIKO (India) PVT. LTD
SERAMPORE HOOGHLY WB

DRAWING No. AT-15011-01

REV.

No.	ALTERATIONS	DATE	SIGN	CHQD.	APPD.

DRAWING No.

REF. No. --

THIS DRAWING IS THE PROPERTY OF AIR TECHNIKO (INDIA) PVT. LTD. AND MUST NOT BE COPIED WITHOUT OUR CONSENT NOR MADE KNOWN TO A THIRD PARTY
SIZE DIN A3 (420 X 297 mm)